STA-RITE®

MAX-E-PRO®
CENTRIFUGAL PUMPS
WITH INTEGRAL TRAP

O W N E R ' S M A N U A L

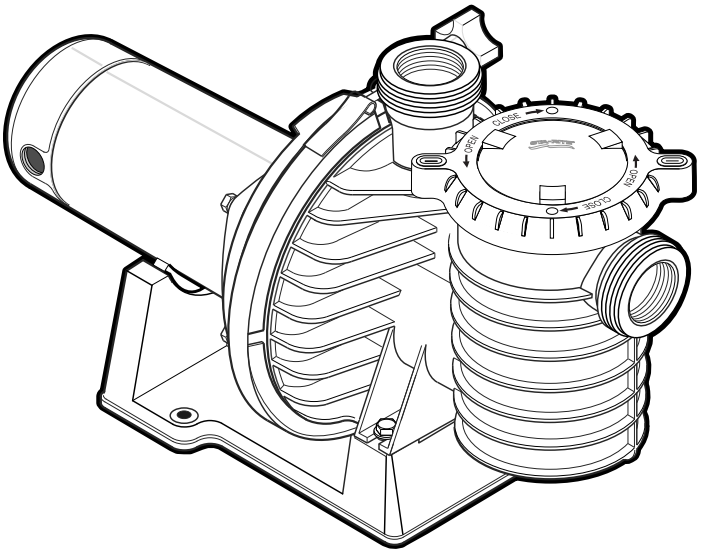

INSTALLATION, OPERATION & PARTS

Series P6RA, P6EA, P6E and P6R
See Page 2 for Model Numbers

This manual must be given to the owner/user of this pump

© 2014 Pentair Water Pool and Spa, Inc. All rights reserved.
1620 Hawkins Ave., Sanford, NC 27330 • (919) 566-8000
10951 West Los Angeles Ave., Moorpark, CA 93021 • (805) 553-5000

Max-E-Pro™, Sta-Rite® are trademarks and/or registered trademarks of Pentair Water Pool and Spa, Inc. and/or its affiliated companies in the United States and/or other countries. Unless noted, names and brands of others that may be used in this document are not used to indicate an affiliation or endorsement between the proprietors of these names and brands and Pentair Water Pool and Spa, Inc. Those names and brands may be the trademarks or registered trademarks of those parties or others.

5/16/14 **S691** (Rev. C)

PUMP WARNINGS AND SAFETY INSTRUCTIONS
For Pool and Spa Pumps (Non SVRS Pumps)

⚠DANGER **FAILURE TO FOLLOW ALL INSTRUCTIONS AND WARNINGS CAN RESULT IN SERIOUS BODILY INJURY OR DEATH.** THIS PUMP SHOULD BE INSTALLED AND SERVICED ONLY BY A QUALIFIED POOL SERVICE PROFESSIONAL. INSTALLERS, POOL OPERATORS AND OWNERS MUST READ THESE WARNINGS AND ALL INSTRUCTIONS IN THE OWNER'S MANUAL BEFORE USING THIS PUMP. THESE WARNINGS AND THE OWNER'S MANUAL MUST BE LEFT WITH THE POOL OWNER.

Warnings and safety instructions for Pentair Aquatic Systems pumps and other related products are available at: **http://www.pentairpool.com/pool-owner/safety-warnings/** Call (800) 831-7133 for additional free copies of these instructions. Please refer to **www.pentairpool.com** for more information related to Pentair Aquatic Systems pumps.

⚠DANGER **SUCTION ENTRAPMENT HAZARD: STAY OFF THE MAIN DRAIN AND AWAY FROM ALL SUCTION OUTLETS!**

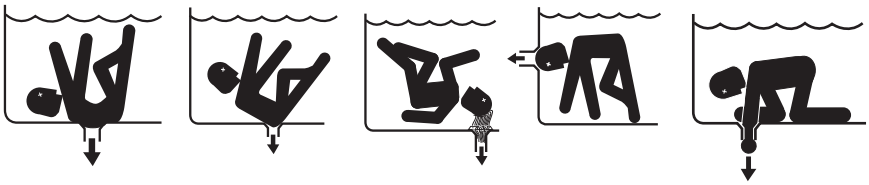

THIS PUMP PRODUCES HIGH LEVELS OF SUCTION AND CREATES A STRONG VACUUM AT THE MAIN DRAIN AT THE BOTTOM OF YOUR POOL AND SPA. THIS SUCTION IS SO STRONG THAT IT CAN TRAP ADULTS OR CHILDREN UNDER WATER IF THEY COME IN CLOSE PROXIMITY TO A POOL OR SPA DRAIN OR A LOOSE OR BROKEN DRAIN COVER OR GRATE.

THE USE OF UNAPPROVED COVERS OR ALLOWING USE OF THE POOL OR SPA WHEN COVERS ARE MISSING, CRACKED OR BROKEN CAN RESULT IN BODY OR LIMB ENTRAPMENT, HAIR ENTANGLEMENT, BODY ENTRAPMENT, EVISCERATION AND/OR DEATH.

The suction at a pool or spa drain or outlet can cause:

Limb Entrapment: When a limb is sucked or inserted into an opening resulting in a mechanical bind or swelling. This hazard is present when a drain cover is missing, broken, loose, cracked or not properly secured.

Hair Entanglement: When the hair tangles or knots in the drain cover, trapping the swimmer underwater. This hazard is present when the flow rating of the cover is too small for the pump or pumps.

Body Entrapment: When a portion of the body is held against the drain cover trapping the swimmer underwater. This hazard is present when the drain cover is missing, broken or the cover flow rating is not high enough for the pump or pumps.

Evisceration/Disembowelment: When a person sits on an open pool (particularly a child wading pool) or spa outlet and suction is applied directly to the intestines, causing severe intestinal damage. This hazard is present when the drain cover is missing, loose, cracked, or not properly secured.

Mechanical Entrapment: When jewelry, swimsuit, hair decorations, finger, toe or knuckle is caught in an opening of an outlet or drain cover. This hazard is present when the drain cover is missing, broken, loose, cracked, or not properly secured.

NOTE: ALL SUCTION PLUMBING MUST BE INSTALLED IN ACCORDANCE WITH THE LATEST NATIONAL AND LOCAL CODES FOR SWIMMING POOLS, SPAS AND HOT TUBS, INCLUDING NSPI STANDARDS AND CPSC GUIDELINES.

READ AND KEEP THESE INSTRUCTIONS FOR FUTURE REFERENCE

PUMP (Non SVRS) WARNINGS AND SAFETY INSTRUCTIONS

⚠WARNING TO MINIMIZE THE RISK OF INJURY DUE TO SUCTION ENTRAPMENT HAZARD:

- Pools and spas should utilize a minimum of two drains per pump.
- A properly installed and secured ANSI/ASME A112.19.8 approved anti-entrapment suction cover must be used for each drain.
- Each suction cover must be installed at least three (3') feet apart, as measured from the nearest point to nearest point.
- Regularly inspect all covers for cracks, damage and advanced weathering.
- If a cover becomes loose, cracked, damaged, broken or is missing, close the pool or spa immediately, shut off the pump, post a notice and keep the pool or spa closed until an appropriate certified cover is properly installed.
- Replace drain covers as necessary. Drain covers deteriorate over time due to exposure to sunlight, pool chemicals and weather.
- Avoid getting hair, limbs or body in close proximity to any suction cover, pool drain or outlet.
- Use a safety vacuum release system ("SVRS"), suction limiting system or automatic pump shut-off system.
- Disable suction outlets or reconfigure into return inlets.

⚠WARNING A clearly labeled emergency shut-off switch for the pool pump and spa jet pump must be in an easily accessible, obvious place near the pool or spa. Make sure bathers know where it is and how to use it in case of emergency.

The Virginia Graeme Baker (VGB) Pool and Spa Safety Act creates new requirements for owners and operators of commercial swimming pools and spas.

Commercial pools or spas constructed on or after December 19, 2008, shall utilize:

(A) A multiple main drain system without isolation capability with suction outlet covers that meet ASME/ANSI A112.19.8a Suction Fittings for Use in Swimming Pools, Wading Pools, Spas, and Hot Tubs and either:
(i) A safety vacuum release system (SVRS) meeting ASME/ANSI A112.19.17 Manufactured Safety Vacuum Release systems (SVRS) for Residential and Commercial Swimming Pool, Spa, Hot Tub, and Wading Pool Suction Systems and/or ASTM F2387 Standard Specification for Manufactured Safety Vacuum Release Systems (SVRS) for Swimming pools, Spas and Hot Tubs or
(ii) A properly designed and tested suction-limiting vent system or
(iii) An automatic pump shut-off system.

Commercial pools and spas constructed prior to December 19, 2008, with a single submerged suction outlet shall use a suction outlet cover that meets ASME/ANSI A112.19.8a and either:

(A) A SVRS meeting ASME/ANSI A112.19.17 and/or ASTM F2387, or
(B) A properly designed and tested suction-limiting vent system, or
(C) An automatic pump shut-off system, or
(D) Disabled submerged outlets, or
(E) Suction outlets shall be reconfigured into return inlets.

HAZARDOUS PRESSURE: STAND CLEAR OF PUMP AND FILTER DURING START-UP
Pool and spa circulation systems operate under high pressure. When any part of the circulating system (i.e. lock ring, pump, filter, valves, etc.) is serviced, air can enter the system and become pressurized. Pressurized air can cause the pump housing cover filter lid and valves to violently separate which can result in severe personal injury or death. Filter tank lid and strainer cover must be properly secured to prevent violent separation. Stand clear of all circulation system equipment when turning on or starting up pump.

CAUTION!: Electrical controls such as on/off switches, timers, and control systems, etc. should be properly installed to allow the operation (start-up, shut-down, or servicing) of any pump or filter without requiring the user to place any portion of his/her body over or near the pump strainer lid or filter lid. Such installation should allow the user to stand clear of the filter and pump during system start-up, shut down or servicing of the system.

Before servicing pool and spa equipment, make note of the filter pressure. Be sure that all controls are set to ensure the system cannot inadvertently start during service. Turn off all power to the pump. **IMPORTANT: Place filter manual air relief valve in the open position and wait for all pressure in the system to be relieved.**
Before starting the system, fully open the manual air relief valve and place all system valves in the "open" position to allow water to flow freely from the pool and spa back to the pool or spa. Stand clear of all pool and spa equipment and start the pump. **IMPORTANT: Do not close filter manual air relief valve until all pressure has been discharged from the valve and a steady stream of water appears.** Observe filter pressure gauge and be sure it is not higher than the pre-service condition.

‘P6RA’, P6EA’ ‘P6E’ and ‘P6R’ SERIES PUMP WITH TRAP

To avoid unneeded service calls, prevent possible injuries, and get the most out of your pump, READ THIS MANUAL CAREFULLY!

The Sta-Rite ‘P6RA’, ‘P6EA’, ‘P6R’ and ‘P6E’ Series Self-priming Centrifugal pumps:

- Are designed for use with swimming pools or as centrifugal pumps.

Table of Contents

Safety instructions	**2-3**
Installation	**3-5**
Electrical	**5-8**
Operation	**9-11**
Storage/Winterizing	**10**
Pump Service	**10-11**
Troubleshooting Guide	**12**
Repair Parts List	**13-15**

Technical Support

Sanford, North Carolina
(8 A.M. to 4:30 P.M. EST)

Moorpark, California
(8 A.M. to 4:30 P.M. PST)

Phone: (800) 831-7133
Fax: (800) 284-4151

www.pentairpool.com www.staritepool.com

READ AND FOLLOW SAFETY INSTRUCTIONS!

⚠ This is the safety alert symbol. When you see this symbol on your system or in this manual, look for one of the following signal words and be alert to the potential for personal injury.

⚠ DANGER warns about hazards that will cause death, serious personal injury, or major property damage if ignored.

⚠ WARNING warns about hazards that can cause death, serious personal injury, or major property damage if ignored.

⚠ CAUTION warns about hazards that will or can cause minor personal injury or property damage if ignored.

NOTICE indicates special instructions not related to hazards.

Carefully read and follow all safety instructions in this manual and on equipment. Keep safety labels in good condition; replace if missing or damaged.

⚠ WARNING **Hazardous pressure** Incorrectly installed or tested equipment may fail, causing severe injury or property damage.

Read and follow instructions in owner's manual when installing and operating equipment. Have a trained pool professional perform all pressure tests.

1. Do not connect system to a high pressure or city water system.

Max-E-Pro® Pump Models

Hp	EnergyEfficient Full-Rate	EnergyEfficient Up-Rate	Standard Full-Rate	Standard Up-Rate	2-Speed	3 Phase	3 Phase 575v	3 Phase200/400V
1/2	P6E6C-204L	/	/	/	/	P6R6C3-204	/	/
3/4	P6E6D-205L	/	P6R6D-205L	/	/	P6R6D3-205	P6EA6D36-204	P6R62D3-186
1	P6E6E-206L	P6EA6E-205L	P6R6E-206L	P6RA6E-205L	/	P6R6E3-206	P6EA6E36-205	P6R62E3-187
1-1/2	P6E6F-207L	P6EA6F-206L	P6R6F-207L	P6RA6F-206L	P6RA6YF-206L	P6R6F3-207	/	P6R62F3-188
1-3/4	/	P6EAA6F-216L	/	P6RAA6F-216L	/	/	/	/
2	P6E6G-208L	P6EA6G-207L	P6R6G-208L	P6RA6G-207L	P6RA6YG-207L	P6R6G3-208	P6EA6G36-207	P6R62G3-189
2-1/2	/	/	/	P6RAA6G-208L	P6EAA6G-208L	/	/	/
3	P6E6H-209L	/	P6R6H-209L	/	/	P6R6H3-209	P6E6H36-209	/

2. Use equipment only in a pool or spa installation.
3. Install pump with at least two (2) hydraulically balanced main drains equipped with correctly installed, screw-fastened, anti-entrapment certified covers. See Page 4.
4. **⚠WARNING** Trapped air in system can cause property damage. BE SURE all air is out of system before operating or testing equipment and/or personal injury.

   Before pressure testing, make the following safety checks:

- Check all clamps, bolts, lids, and system accessories before testing.
- Release all air in system before testing.
- Water pressure for test must be less than 25 PSI (7.5 kg/cm^2).
- Water Temperature for test must be less than 100° F (38° C).
- Limit test to 24 hours. After test, visually check system to be sure it is ready for operation. Remove trap lid and retighten hand tight only.

  NOTICE: These parameters apply to Sta-Rite equipment only. For non-Sta-Rite equipment, consult manufacturer.

IMPORTANT SAFETY INSTRUCTIONS

Always follow basic safety precautions with this equipment, including the following.

⚠WARNING To reduce the risk of injury, do not permit children to use this product.

⚠ CAUTION This pump is for use with permanently installed pools and may also be used with hot tubs and spas if so marked. Do not use with storable pools. A permanently installed pool is constructed in or on the ground or in a building such that it cannot be readily disassembled for storage. A storable pool is constructed so that it may be readily disassembled for storage and reassembled to its original integrity.

SAVE THESE INSTRUCTIONS

INSTALLATION

Only qualified, licensed personnel should install pump and wiring.

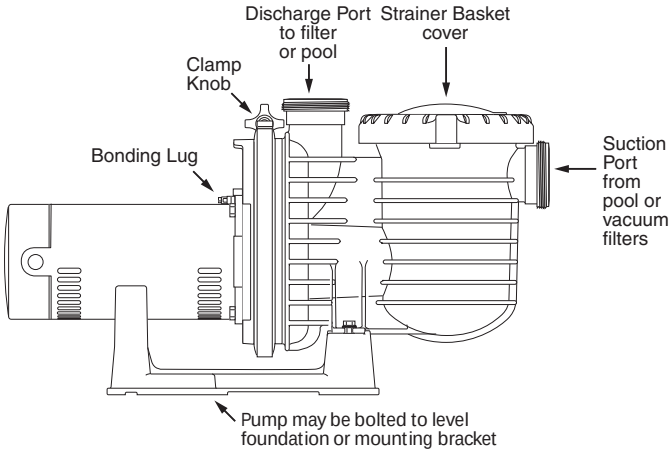

Figure 1

NOTICE: Port threads are: Internal - 2" NPT for direct connection to pipe. External - 3-1/4" Buttress. Fits Sta-Rite U11-200P Union Collar for quick disconnect pipe connection.

See Page 13 for Union Kits.

Pump mount must:

Be located away from corrosive or flammable chemicals.

Have enough ventilation to maintain air temperature at less than the maximum ambient temperature rating (Max. Amb.) listed on the motor model plate. If this pump is installed in an enclosure/pump house, the enclosure must have adequate ventilation and air circulation to keep the temperature in the enclosure at or below the motor's rated ambient temperature whenever the pump is running.

Be solid - Level - Rigid - Vibration free - Non-combustible. (To reduce vibration and pipe stress, bolt pump to mount.)

Allow pump suction inlet height to be as close to water level as possible.

Allow use of short, direct suction pipe (To reduce friction losses).

Allow for gate valves in suction and discharge piping.

Have adequate floor drainage to prevent flooding.

Be protected from excess moisture.

Allow adequate access for servicing pump and piping.

⚠WARNING Fire and burn hazard. Modern motors run at high temperatures. To reduce the risk of fire, do not allow leaves, debris, or foreign matter to collect around the pump motor. To avoid burns when handling the motor, let it cool for 20 minutes before trying to work on it.

NOTICE: Use thread seal tape for making all threaded connections to the pump. Do not use pipe dope; pipe dope will cause stress cracking in the pump.

NOTICE: Pump suction and discharge connections have molded in thread stops. DO NOT try to screw pipe in beyond these stops.

Taping Instructions:

Use only new or clean PVC pipe fittings.

Wrap male pipe threads with one to two layers of thread seal tape. Cover entire threaded portion of pipe.

Do not overtighten or tighten past thread stop in pump port!

If leaks occur, remove pipe, clean off old tape, rewrap with one to two additional layers of tape and remake the connection.

NOTICE: Support all piping connected with pump!

Piping:

Use at least 2" IPS PVC (51mm) pipe. Increase size if a long run is needed.

To avoid strains on the pump, support both suction and discharge pipes independently. Place these supports near the pump.

To avoid a strain left by a gap at the last connection, start all piping at the pump and run pipe away from the pump.

Never use a suction pipe smaller than pump suction connection.

To avoid airlocking, slope suction pipe slightly upward toward the pump.

NOTICE: To prevent flooding when removing pump for service, all flooded suction systems must have gate valves in suction and discharge pipes.

Fittings:

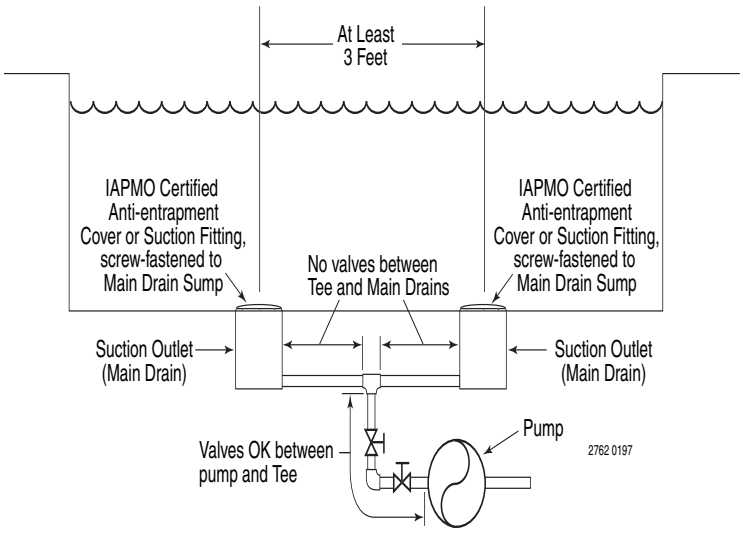

Figure 2 – Recommended pump suction layout.

Fittings restrict flow; for best efficiency use fewest possible fittings.

Avoid fittings which could cause an air trap.

Pool fittings must conform to International Association of Plumbing and Mechanical Officials (IAPMO) standards.

Use only non-entrapping suction fitting or double suction.

POOL PUMP SUCTION REQUIREMENTS

⚠WARNING Pump suction is hazardous and can trap and drown or disembowel bathers. Do not use or operate swimming pools, spas, or hot tubs if a suction outlet cover is missing, broken, or loose. Follow the guidelines below for a pump installation which minimizes risk to users of pools, spas, and hot tubs.

Entrapment Protection

The pump suction system must provide protection against the hazard of suction entrapment or hair entrapment/entanglement.

Suction Outlet Covers

All suction outlet covers must be maintained. They must be replaced if cracked, broken, or missing.

See below for outlet cover certification requirements.

All suction outlets must have correctly installed, screw-fastened covers in place.

Testing and Certification

Suction outlet covers must have been tested by a nationally recognized testing laboratory and found to comply with the latest ASME/ANSI Specification for Suction Fittings For Use in Swimming Pools, Spas, Hot Tubs, and Whirlpool Bathtub Applications.

Outlets Per Pump

Provide at least two hydraulically balanced main drains, with covers (see Page 5), for each swimming pool pump suction line. The centers of the main drains (suction fittings) must be at least three feet apart.

The system must be built so that it cannot operate with the pump drawing water from only one main drain (that is, there must be at least two main drains connected to the pump whenever it is running). (See Figure 2). However, if two main drains run into a single suction line, the single suction line may be equipped with a valve which will shutoff both main drains from the pump (see Figure 2).

More than one pump can be connected to a single suction line as long as the requirements above are met.

Water Velocity

The maximum water velocity through any suction outlet must be 1.5 feet per second unless the outlet complies with the latest ASME/SNSI Specification for Suction Fittings For Use in Swimming Pools, Spas, Hot Tubs, and Whirlpool Bathtub Applications. In any case, do not exceed the suction fittings maximum designed flow rate.

If 100% of the pump's flow comes from the main drain system, the maximum water velocity in the pump suction hydraulic system must be six feet per second or less even if one main drain (suction fitting) is completely blocked. The flow through the remaining main drain(s) must comply with the latest ASME/ANSI Specification for Suction Fittings For Use in Swimming Pools, Spas, Hot Tubs, and Whirlpool Bathtub Applications.

ELECTRICAL

Notice

Due to wide variation in electrical equipment, power supply, and installation requirements, **this manual does not make specific recommendations concerning auxiliary equipment or fusing/wiring**.

Wire sizing, wire type, branch circuit fuse protection, motor starter, control equipment, and related items must meet National Electrical Code and local code requirements. Motors are supplied by several manufacturers and nameplate data (service factor, maximum amperage, etc.) will vary. Consult control manufacturer and motor nameplate on your pump to correctly choose and size motor starter and control equipment for your particular installation. Specific electrical questions or problems should be addressed to the manufacturer of the electrical component in question.

⚠ Ground motor before connecting to electrical power supply. Failure to ground motor can cause severe or fatal electrical shock hazard.

⚠ Do not ground to a gas supply line.

⚠ To avoid dangerous or fatal electrical shock, turn OFF power to motor before working on electrical connections.

⚠ Ground Fault Circuit Interrupter (GFCI) tripping indicates an electrical problem. If GFCI trips and will not reset, have a qualified electrician inspect and repair electrical system.

⚠ Exactly match supply voltage to nameplate voltage. Incorrect voltage can cause fire or seriously damage motor and voids warranty. If in doubt consult a licensed electrician.

Voltage/Phase

Voltage at motor must be not more than 10% above or below motor nameplate rated voltage or motor may overheat, causing overload tripping and reduced component life. If voltage is less than 90% or more than 110% of rated voltage when motor is running at full load, consult power company. **Do not try to connect 3-phase motors to single phase power supply or single phase motors to 3-phase power supply**.

Emergency Shutoff

Install an Emergency Shutoff Switch near pool. Clearly mark this switch and mount it in alocation that is accessible to bathers or pool operating personnel (e.g. lifeguards). Make sure that all lifeguards and pool personnel understand the switch's use in case of emergency (entrapment, electrical malfunction, etc).

Grounding/Bonding

Install, ground, bond and wire motor according to local or the current National Electrical Code requirements.

Permanently ground motor. Use green ground terminal provided under motor canopy or access plate (See Figure 3); use size and type wire required by code. Connect motor ground terminal to electrical service ground.

Bond motor to pool structure. Use a solid copper conductor, size No. 8 AWG (8.4 sq.mm) or larger. Run wire from external bonding lug (see Figure 3) to reinforcing rod or mesh.

Connect a No. 8 AWG (8.4 sq.mm) solid copper bonding wire to the pressure wire connector provided on the motor housing and to all metal parts of the swimming pool, spa, or hot tub and to all electrical equipment, metal piping or conduit within 5 feet (1.5 m) of the inside walls of swimming pool, spa, or hot tub.

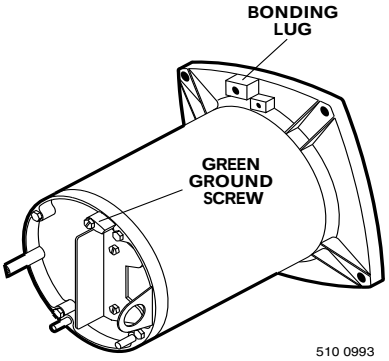

Figure 3: Typical ground screw and bonding lug locations.

WIRING

3 Phase Wiring - Wire a Single Speed, Single Voltage, 3 Phase Motor.

Notice: 3 phase models require magnetic motor starters and external overload protection. If in doubt about the procedure, consult a licensed electrician. Be sure the wire and circuit breaker sizes match the pump motor rating (Table II; Page 8). There are three terminals labeled L1, L2, and L3 (or LINE A, LINE B, and LINE C) on the pump motor. Attach the power leads to these terminals as specified on the pump motor wiring label. Check for proper pump motor rotation. If motor is not running properly, switch any two of the three input wires. Verify proper pump motor rotation.

Note: For 575 VAC models, consult a licensed electrician.

Pump must be permanently connected to circuit. See Figures 4A and 4B for wiring connection diagrams. Match wire and circuit breaker sizes to correct Fusing and Wiring Data Chart (Page 7). If other lights or appliances are also on the same circuit, be sure to add their amp loads to pump amp load. (If unsure how to do this or if this is confusing, consult a licensed electrician.) Use the load circuit breaker as the master on-off switch.

Install a Ground Fault Circuit Interrupter (GFCI) in circuit; it will sense a short-circuit to ground and disconnect power before it becomes dangerous to pool users. For size of GFCI required and test procedures for GFCI, see manufacturer's instructions.

In case of power outage, check GFCI for tripping (which will prevent normal water circulation). Reset if necessary.

NOTICE: If you do not use conduit when wiring motor, be sure to seal wire opening on end of motor to prevent dirt, bugs, etc., from entering motor.

⚠WARNING Risk of dangerous or fatal electrical shock. Be sure that power to the motor circuit is off before working on wiring, wiring connections, or motor. Re-install the motor end cover and all other wiring covers before turning on the power.

1. Turn off power.
2. Remove the motor end cover.

To Wire a Single Speed, Single Voltage Motor

There are two terminals labeled L1 and L2. Attach the power leads to these terminals. Either wire may attach to either terminal.

To Wire a Dual-Voltage Motor

Dual voltage motors have a plug to change from 230 volts (factory setting) to 115 volts).

1. If you have 230 volts motor supply voltage, confirm that the plug is set for 230 volts. The arrow on the plug will point to the 230 volt position. Note that plug only connects with one prong in this position.
2. If you have 115 volt supply, pull the plug straight up and place it on the two brass prongs as shown.

NOTE: Arrow is highlighted for clarity.

To Wire a Two-Speed Motor

Wire the pump as shown in the diagram.

Figure 4A -Voltage Change Plug Set for 230 Volts

Figure 4B Voltage Change Plug Set for 115 Volts

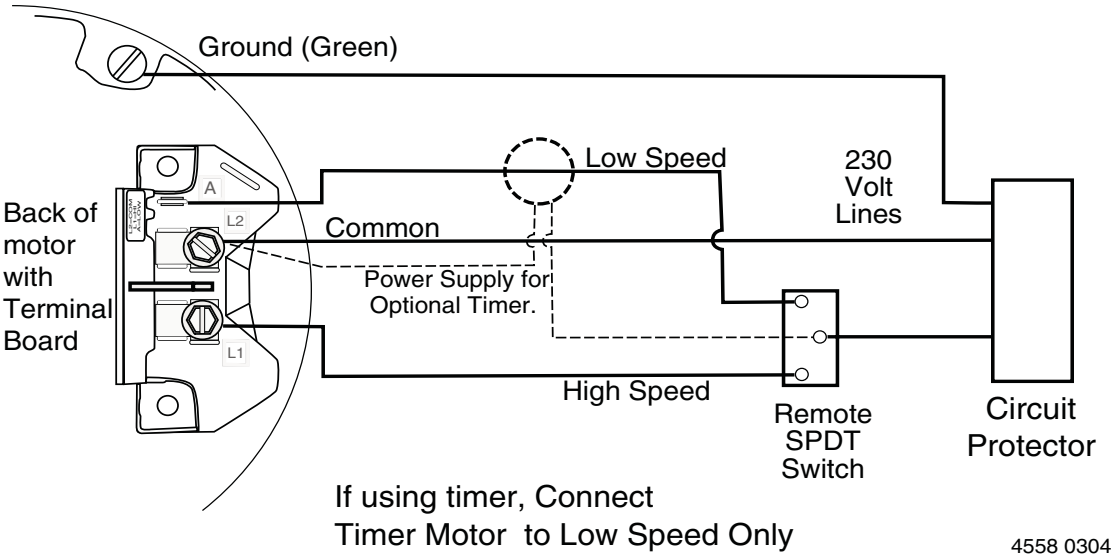

Minimum switch and timer amp rating must equal Branch Fuse Rating given in "Recommended Fusing and Wiring Data" table.

Figure 4C - 2-Speed Motor Wiring Diagram

TABLE I - RECOMMENDED FUSING AND WIRING DATA – P6E MODELS

Motor HP	Branch Fuse Rating Amps*	Max Load Amps	Voltage/ Hz/Phase	Serv. to Motor - Dist. in Ft. (M) 0-100' (0-30 M)	101-200' (30-60 M)	201-300' (60-90 M)
P6E Models:						
1/2	15	11.0	115/60/1	14(2)	10(5.5)	8(8.4)
3/4	20	13.8	115/60/1	12(3)	10(5.5)	8(8.4)
1	25	16.0	115/60/1	12(3)	8(8.4)	6(14)
1/2	15	5.5	230/60/1	14(2)	14(2)	14(2)
3/4	15	6.9	230/60/1	14(2)	14(2)	14(2)
1	15	8.0	230/60/1	14(2)	14(2)	14(2)
1-1/2	15	10.4	230/60/1	14(2)	12(3)	12(3)
2	15	11.2	230/60/1	14(2)	12(3)	12(3)
3	25	15.8	230/60/1	12(3)	12(3)	10(5.5)

Wire Size AWG (mm^2)

* Time delay fuses are recommended instead of standard fuses in any motor circuit.

TABLE II - RECOMMENDED FUSING AND WIRING DATA - P6EA MODELS

Motor HP	Branch Fuse Rating Amps*	Max Load Amps	Voltage/ Hz/Phase	Serv.to Motor-Dist.in Ft(M) 0-100' (0-30 M)	101-200' (30-60 M)	201-300' (60-90 M)
P6EA MODELS						
1	20	13.8	115/60/1	12(3)	10(5.5)	8(8.4)
1-1/2`	25	16	115/60/1	12(3)	8(8.4)	6(14)
1	15	6.9	230/60/1	14(2)	14(2)	14(2)
1-1/2`	15	8.0	230/60/1	14(2)	14(2)	12(3)
1-3/4'	15	10.4	230/60/1	14(2)	12(3)	12(3)
2	15	10.4	230/60/1	14(2)	12(3)	12(3)
2-1/2'	15	11.2	230/60/1	14(2)	12(3)	12(3)
P6EA 3PH 575V						
3/4	15	1.2	575/60/3	14	14	14
1	15	1.5	575/60/3	14	14	14
2	15	3.2	575/60/3	14	14	14
3	15	3.9	575/60/3	14	14	14

TABLE III - RECOMMENDED FUSING AND WIRING DATA - P6RA MODELS

Motor HP	Branch Fuse Rating Amps*	Max Load Amps	Voltage/ Hz/Phase	Serv.to Motor-Dist.in Ft(M) 0-100' (0-30 M)	101-200' (30-60 M)	201-300' (60-90 M)
P6RA Models						
1	20/15	15.3/7.6	115/230/60/1	12/14(3/2)	8/14(8.4/2)	6/14(14/2)
1-1/2`	30	19.2	115/60/1	10(5.5)	8(8.4)	6(14)
1-1/2`	15	9.6	230/60/1	14(2)	14(2)	12(3)
1-1/3'	15	12.0	230/60/1	14(2)	12(3)	12(3)
2	15	12	230/60/1	14(2)	14(2)	12(3)
P6RA 2- Speed Models						
1-1/2`	15	9.2/2.5	230/60/1	14(2)	14(2)	12(3)
2	15	10.1/3.7	230/60/1	14(2)	14(2)	12(3)
P6R6 Models						
3/4	15	6.6/13.2	230/115	14/10	12/8	10/6
1	20	8.0/16.0	230/115	14/8	12/8	10/6
1-1/2`	30	SF10.5/21.0	230/115	14/8	10/6	10/4
2	15	11.5	230	12	10	8
3	20	14.1	230	12	10	8
P6R6 3PH Models						
1/2	15	3.2-3.0/1.5	208-230/460/60/3	14/14	14/14	14/14
3/4	15	3.8-3.6/1.8	208-230/460/60/3	14/14	14/14	14/14
1	15	5.0-4.6/2.3	230/460/60/3	14/14	14/14	12/14
1-1/2	15	6.4-5.8/2.9	230/460/60/3	14/14	12/14	10/14
2	15	7.1-6.8/3.4	230/460/60/3	14/14	12/14	10/14
3	15	11.0-10.4/5.2	230/460/60/3	14/14	10/14	8/14
P6R6 3PH 200/400V Models						
3/4	15	3.8/1.9	200/400/60/3	14/14	14/14	12/14
1	15	5.2/2.6	200/400/60/3	14/14	12/14	10/14
1-1/2	15	7.6/3.8	200/400/60/3	14/14	10/14	8/14
2	15	9.8	200/60/3	12/14	10/14	8/14

Wire Size AWG (mm^2)

Note: Wire gage calculated to prevent the voltage drop
from exceeding 3 percent of supply voltage for the P6R6 Single and 3 Phase models.

OPERATION

⚠WARNING **DO NOT run the pump dry. If the pump is run dry, the mechanical seal will be damaged and the pump will start leaking. If this occurs, the damaged seal must be replaced. ALWAYS maintain proper water level. If the water level falls below the suction port, the pump will draw air through the suction port, losing the prime and causing the pump to run dry, resulting in a damaged seal. Continued operation in this manner could cause a loss of pressure, resulting in damage to the pump case, impeller and seal and may cause property damage and personal injury.**

⚠WARNING Before removing trap cover:

1. STOP PUMP before proceeding.
2. CLOSE GATE VALVES in suction and discharge air.
3. **RELEASE ALL PRESSURE** from pump and piping system. To reduce the risk of injury NEVER tighten or loosen clamp while pump is operating!

⚠ If pump is being pressure tested, be sure pressure has been released before removing trap cover.

⚠ Do not block pump suction. To do so with body may cause severe or fatal injury. Small children using pool must ALWAYS have close adult supervision.

⚠WARNING Fire and burn hazard. Modern motors run at high temperatures. To reduce the risk of fire, do not allow leaves, debris, or foreign matter to collect around the pump motor. To avoid burns when handling the motor, let it cool for 20 minutes before trying to work on it. An automatic internal cutoff switch protects the motor from heat damage during operation.

NOTICE: Maximum ambient temperature for motor operation must not exceed maximum ambient temperature rating on motor model plate.

Priming Pump

Release all pressure from filter, pump, and piping system; see the filter owner's manual.

In a flooded suction system (water source higher than pump), pump will prime itself when suction and discharge valves are opened.

⚠WARNING

DO NOT open the strainer pot if pump fails to prime or if pump has been operating without water in the strainer pot. Pumps operated in these circumstances may experience a build up of vapor pressure and may contain scalding hot water. Opening the pump may cause serious personal injury. In order to avoid the possibility of personal injury, make sure the suction and discharge valves are open and strainer pot temperature is cool to touch, then open with extreme caution.

If pump is not in a flooded suction system, remove trap cover handle ring and trap cover; fill trap and pump with water.

Do not lubricate the trap cover O-Ring. The original equipment O-Ring contains a permanent internal lubricant.

⚠ NOTICE: If you replace the O-Ring with a non-internally lubricated O-Ring, you may need to apply a silicone based lubricant.

Clean and inspect O-Ring; reinstall on trap.

Replace trap cover and handle ring on trap; turn handle ring clockwise to tighten cover.

⚠WARNING Do not use a wrench, this may damage the trap cover handle ring which can cause property damage or personal injury.

Pump should prime now. Priming time will depend on vertical length of suction lift and horizontal length of suction piping.

If pump does not prime, make sure that all valves are open, suction pipe end is under water, and that there are no leaks in suction pipe. See Troubleshooting Guide, Page 12.

Routine Maintenance

The only routine maintenance needed is inspection/cleaning of trap basket. Debris or trash that collects in basket will choke off water flow through the pump. Follow instructions below to clean trap:

1. Stop pump, close valves in suction and discharge, and release all pressure from system before proceeding.
2. Remove trap cover handle ring (turn ounterclockwise). If necessary, tap handles gently with a rubber mallet.
3. Remove strainer basket and clean. Be sure all holes in basket are clear, flush basket with water and replace in trap with large opening at pipe connection port (between ribs provided). If basket is replaced backwards cover will not fit on trap body.
4. Clean and inspect lid O-Ring; reinstall on trap.

⚠WARNING THE FILTER OPERATES UNDER HIGH PRESSURE. WHEN ANY PART OF THE CIRCULATING SYSTEM (e.g., LOCK RING, PUMP, FILTER, VALVES, ETC.) IS SERVICED, AIR CAN ENTER THE SYSTEM AND BECOME PRESSURIZED. PRESSURIZED AIR CAN CAUSE THE LID TO SEPARATE WHICH CAN RESULT IN SEVERE INJURY, DEATH, OR PROPERTY DAMAGE. TO AVOID THIS POTENTIAL HAZARD, FOLLOW THESE INSTRUCTIONS.

5. Clean O-Ring groove on trap body and replace cover and handle ring. To help keep cover from sticking, tighten hand tight only.

⚠ WARNING

Hazardous voltage. Can shock, burn, or cause death.

Disconnect power before working on pump or motor.

6. Prime pump (see priming instructions).

Draining Pump

1. Pump down water level below all inlets to the pool.

⚠ To avoid dangerous or fatal electrical shock hazard, turn OFF power to motor before draining pump.

2. Remove trap cover and use low pressure air to blow accumulated water from the piping system. Lugs have been provided on the trap lid to use a lever or pry bar for loosening.
3. Cap inlet piping after draining to keep water out of the pipes.
4. To prevent pump from freezing, remove trap cover and drain the tank body through the drain plugs (Key No. 19, Page 13). Clean pump and trap basket thoroughly; replace trap cover.

   ⚠ WARNING Do not use a wrench, this may damage the trap cover handle ring which can cause property damage or personal injury. Use a rubber mallet only if necessary to remove cover! If pump is not anchored, use caution not to break attached piping!
5. Be sure motor is kept dry and covered.

Storage/Winterizing:

⚠ WARNING Purging the system with compressed air can cause property damage, with risk of severe injury or death to anyone nearby. Use only a low pressure (below 5 PSI), high volume blower when air purging the pump, filter, or piping.

NOTICE: Allowing pump to freeze will damage pump and void warranty!

NOTICE: Do not use anti-freeze solutions (except propylene glycol) in your pool/spa system. Propylene glycol is non-toxic and will not damage plastic system components; other anti-freezes are highly toxic and may damage plastic components in the system.

Drain all water from pump and piping when expecting freezing temperatures or when storing pump for a long time (see instructions below).

Keep motor dry and covered during storage.

To avoid condensation/corrosion problems, do not cover pump with plastic.

For outdoor/unprotected installations:

1. Gravity drain system as far as possible.--
2. Protect areas which retain water with non-toxic propylene glycol antifreeze (“RV antifreeze”).
3. Enclose entire system in a weatherproof enclosure.
4. To avoid condensation/corrosion damage, allow ventilation; do not wrap system in plastic.
5. Use a 40% propylene glycol/60% water solution to protect pump to -50°F (-46°C).

Startup For Winterized Equipment

1. Remove any temporary weather protection placed around system.
2. Follow filter manufacturer’s instructions for reactivation of the filter.
3. Inspect all electrical wiring for damage or deterioration over the shutdown period. Have a qualified service person-- repair wiring as needed.
4. Inspect and tighten all watertight connections.
5. Open all valves in suction and return piping.
6. Remove any winterizing plugs in piping system.
7. Drain all antifreeze from system.
8. Close all drain valves and replace all drain plugs in piping system.
9. Prime pump according to instructions on Page 9.

PUMP SERVICE

Pump should only be serviced by qualified personnel.

For best results, use only genuine Sta-Rite factory parts.

Be sure to prime pump (Page 9) before starting.

⚠ CAUTION Before removing clamp or trap cover:

⚠ WARNING

Hazardous voltage. Can shock, burn, or cause death.

Disconnect power before working on pump or motor.

1. STOP PUMP before proceeding.
2. CLOSE GATE VALVES in suction and discharge pipes.
3. RELEASE ALL PRESSURE from pump and piping system.

⚠ WARNING 4. To reduce the risk of injury, NEVER tighten or loosen clamp while pump is operating!

⚠ To avoid dangerous or fatal electrical shock hazard, turn OFF power to motor before working on pump or motor.

No lubrication or regular maintenance is needed beyond reasonable care and periodic cleaning of strainer basket. If shaft seal is worn or damaged, repair as follows:

Pump Disassembly/Removing Old Seal

Disconnect power to pump motor.

⚠ Be sure gate valves on suction and return piping are closed before starting work.

Release all pressure by opening all vents before starting work.

1. Drain pump by removing drain plugs on bottom of pump body and trap body.
2. Be sure there is no pressure in trap body; remove cover (unscrew by turning handle ring counterclockwise).
3. Remove clamp holding pump halves together. Motor and seal plate assembly can now be pulled away from pump body.
4. Remove five screws and washers holding diffuser to seal plate. Remove diffuser.
5. Remove motor canopy. Being careful not to touch capacitor terminals, loosen capacitor clamp and move capacitor to one side.
6. Hold shaft with 7/16" open-end wrench on motor shaft flats.
7. Unscrew impeller from shaft (turn counterclockwise when facing it).
   NOTICE: On models with impeller screw: Remove impeller screw (left hand thread - turn clockwise) and gasket before removing impeller. Inspect gasket for damage, cracks, etc. Replace if damaged.
8. Pull rotating member of seal off of impeller sleeve; clean sleeve.
9. Remove four screws holding seal plate to motor.
10. Place seal plate face down on flat surface and tap out ceramic seat.
11. Clean seal cavity in seal plate and clean motor shaft.

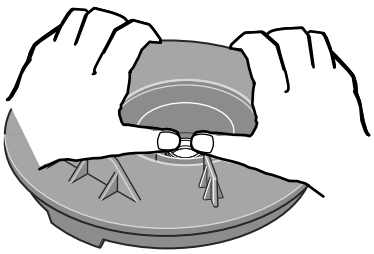

4301 0103

Figure 5: Press seal into seal plate

Pump Reassembly/Installing New Seal

1. Ceramic seat must be clean and free of dirt, grease, dust, etc. Wet outer edge of rubber cup on ceramic seat with small amount of liquid detergent; press ceramic seat into seal plate firmly and squarely with finger pressure (Figure 5).
2. If ceramic seat will not locate properly, remove it, place face up on bench and reclean cavity. Ceramic seat should now locate.
3. If seat still will not locate properly, place a cardboard washer over the polished face and use a piece of 3/4" (19mm) standard pipe for pressing purposes.
   NOTICE: Be sure not to scratch or mar polished surface or seal will leak.
4. Remount seal plate on motor. Tighten bolts to 60-80 inch-lbs. (69-92 kg/cm) torque.
5. Apply a small amount of liquid detergent to inside diameter of rotating half of seal.
6. Slide rotating seal member, polished face last, over impeller sleeve until rubber drive ring hits shoulder.
   NOTICE: Be sure not to nick or scratch polished seal face; seal will leak if face is damaged.
7. Screw impeller onto shaft (clockwise); this will automatically locate seal in seal plate.
   NOTICE: On models with impeller screw: Install impeller gasket and lock screw (left-hand thread - turn counterclockwise). Torque lock screw to 50-55 inch-lbs. (57.6-63 kg/cm).
8. Mount diffuser on seal plate; tighten screws to 10-14 inch-lbs. (11.2-16.1 kg/cm) torque.
9. Assemble motor and seal plate to volute; be sure clamp is properly seated.

   NOTICE: Clamp knob can be located in any position around volute; if it is moved after assembly, tighten knob while tapping around clamp to assist sealing. Do not move clamp while pump is full of water.

   ⚠ WARNING Clamp may separate violently off pump if adjusted under pressure and cause property damage or personal injury.
10. Prime pump according to instructions on Page 9.

TROUBLESHOOTING GUIDE

⚠ Read and understand safety and operating instructions in this manual before doing any work on pump!

⚠ Only qualified personnel should electrically test pump motor!

FAILURE TO PUMP; REDUCED CAPACITY OR DISCHARGE PRESSURE

Suction leaks/lost prime:

1. Pump must be primed; make sure that pump volute and trap are full of water. See priming instructions, Page 8.
2. Make sure there are no leaks in suction piping.
3. Make sure suction pipe inlet is well below the water level to prevent pump from sucking air.
4. Suction lift of 10 to 20 feet (3-6 M) will reduce performance. Suction lift of more than 20 feet (6 M) will prevent pumping and cause pump to lose prime. In either case, move pump closer (vertically) to water source. Make sure suction pipe is large enough.

Clogged pipe/trap/impeller, worn impeller:

5. Make sure suction trap is not clogged; if it is, clean trap and strainer.
6. Make sure impeller is not clogged (follow steps 1 through 7 under “Removing Old Seal”, Page 11; check impeller for clogging; follow steps 7 through 10 under “Installing New Seal”, Page 11, for reassembly).
7. Impeller and diffuser may be worn. If so, order replacement parts from Repair Parts List, Page 13.
8. Pump may be trying to push too high a column of water. If so, a “higher head” pump is needed.

⚠ WARNING

Hazardous voltage. Can shock, burn, or cause death.

Disconnect power before working on pump or motor.

Electrical:

9. Pump may be running too slowly; check voltage at motor terminals and at meter while pump is running. If low, see wiring instructions or consult power company. Check for loose connections.
10. Pump may be too hot.
    A. Check line voltage; if less than 90% or more than 110% of rated voltage consult a licensed electrician.
    B. Increase ventilation.
    C. Reduce ambient temperature.
    D. Tighten any loose connections.

MECHANICAL TROUBLES AND NOISE

1. If suction and discharge piping are not adequately supported, pump assembly will be strained. See “Installation”, Page 3.
2. Do not mount pump on a wooden platform! Securely mount on concrete platform for quietest performance.

P6E, P6EA, P6RA
MAX-E-PRO™ POOL PUMP
1/2 through 3 HP Models

REPAIR PARTS LIST

Key No.	Part Description	Qty.	Part No.
1	Motor	1	See page 14/15
2	#10-32x1/2" Screw	1	U30-692SS
2A	Lock Washer	1	U43-22SS
3	Bonding Lug	1	U17-568
4	Water Slinger	1	17351-0009
5	Seal Plate Kit (Incl. Key Nos. 6, 7)	1	354444Z
6	O-Ring	1	U9-228A
7	Shaft Seal	1	37400-0028S
8	Clamp Knob	1	C19-37A
9	Clamp	1	WC36-22
10	Impeller	1	See page 14/15
10A	Impeller Screw O-Ring	1	35505-1426
10B	Impeller Screw	1	See page 14/15
11	Diffuser	1	See page 14/15
12	Diffuser O-Ring	1	U9-374
13	#8 Lock Washer	5	U43-21SS
14	Screw (w/C1-271P Diffuser)	5	U30-922SS
14	Screw (w/C1-271P1 Diffuser)	5	U30-542SS
15	Tank Body Assembly****	1	17307-0110S
16	Trap Cover Assembly**	1	17307-0111S
17	Trap O-Ring	1	35505-1440
18	Basket	1	C8-58P
19	1/4" NPT Drain Plug	2	U178-920P
20	Base Washer	2	U43-41SS
21	Base Screw	2	U30-918SS
22	Base***	1	C4-78P
23	Motor Pad	1	C35-43
24	3/8-16x1" Hex Hd. Screw	4	U30-74SS
•	Voltage Sticker - 230 Volts (Single voltage models only)		U27-68
•	Voltage Sticker - 115/230 Volts (Dual voltage models only)		U27-153
•	Tag, "CAUTION, WARNING (bonding)"		61002-0002
•	Decal, "Do not overtighten..."		U27-644
•	Nameplate		32155-7117

• Not illustrated.
** Includes Trap Cover, Trap Ring and Trap Cover O-Ring.
*** Model P6E6H uses Base No. C4-79P and Motor Pad No. C35-44.
**** Includes Trap Body, Basket, Drain Plugs, and Trap Cover Assembly.

*Models with the * take the following additional parts: C2-84 Pump Adapter (1), C10-41SS Stab Shaft (1), U30-754SS Set Screw (3), U30-74SS Screw 3/8-16X1" Lg (8) and C35-44 Motor Pad (1).

Box A

For quick disconnect pipe connections, purchase separately:
Pkg. 188 2" Slip 1/2 Union Kit or
Pkg. 189 2" NPT 1/2 Union Kit.
Includes 2 each:
U11-200P Union Collar
U9-362 O-Ring
U11-196P 2" Slip adapter or
U11-199P 2" NPT adapter.

Part are common to all models listed except as noted;
Key Nos. 1(Motor), 10(Impeller), and 11(Diffuser) are listed below.

Model No.	HP		Motor No. (Key No. 1)	Impeller (Key No. 10)	Diffuser (Key No. 11)
1 PHASE 60 HZ PUMPS					
115/230 V 1- Speed					
P6E6C-204L	1/2		AE100CHL	C105-238PX	C1-271P1
P6E6D-205L	3/4		AE100DHL	C105-238P	C1-271P1
P6R6D-205L	3/4		355021S	C105-238P	C1-271P1
P6E6E-206L	1		AE100EHL	C105-238PB	C1-271P1
P6EA6E-205L	1		AE100ELL	C105-238P	C1-271P1
P6RA6E-205L	1		A100ELL	C105-238P	C1-271P1
P6R6E-206L	1		355023S	C105-238PB	C1-271P1
P6EA6F-206L	1-1/2		AE100FLL	C105-238PB	C1-271P1
P6RA6F-206L	1-1/2		A100FLL	C105-238PB	C1-271P1
P6R6F-207L	1-1/2		355025S	C105-238PDBA	C1-271P
230 V 1-Speed					
P6E6F-207L*	1-1/2		AE100FHL	C105-238PDBA	C1-271PA
P6EAA6F-216L*	1-3/4		AE100F5LL	C105-238PDCA	C1-271P
P6RAA6F-216L*	1-3/4		A100F5LL	C105-238PDCA	C1-271P
P6E6G-208L*	2		AE100GHL	C105-238PEBA	C1-271PA
P6EA6G-207L*	2		AE100GLL	C105-238PDBA	C1-271PA
P6RA6G-207L*	2		A100GHL	C105-238PDBA	C1-271PA
P6R6G-208L	2		355027S	C105-238PEBA	C1-271P
P6EAA6G-208L*	2-1/2		AE100G5LL	C105-238PEBA	C1-271PA
P6E6H-209L*	3		AE100HLL	C105-238PLA	C1-271PA
P6EAA6G-208L	2 1/2			C105-238PEBA	C1-271P
P6R6H-209L	3		355034S	C105-238PLA	C1-271PA
2-Speed	**Hi Speed**	**Low Speed**			
P6RA6YF-206L**	1-1/2	1/4	A100FLL-Y	C105-238PBA	C1-271P1
P6RA6YG-207L*	2	1/3	A100GLL-Y	C105-238PDBA	C1-271P

3 PHASE 60 HZ PUMPS

230/115 V 1 Speed					
P6R6C3-204	1/2		355206S	C105-238PXA	C1-271P1
P6R6D3-205	3/4		355201S	C105-238PA	C1-271P1
P6R6E3-206	1		355203S	C105-238PBA	C1-271P1
P6R6F3-207	1-1/2		355204S	C105-238PDBA	C1-271P
230 V 1 Speed					
P6R6G3-208	2		355205S	C105-238PEBA	C1-271P
P6R6H3-209	3		355398S	C105-238PLA	C1-271P
200/400v 1 Speed					
P6R62D3-186	3/4		AP100DH2	C105-238A	C1-271P1
P6R62E3-187	1		AP100EH2	C105-238PBA	C1-271P1
P6R62F3-188	1-1/2		AP100FH2	C105-238PDBA	C1-271P
P6R62G3-189	2		AP100GH2	C105-238PDBA	C1-271P

*Uses Key No. 10B Impeller Screw No. 37337-6080.
** Uses Key No. 10B Impeller Screw No. 37337-6081.

MAX-E-PRO Pool Pumps 575 Volts, 3-Phase Models:					
Model No.	**HP**	**Motor No. (Key No. 1)**	**Impeller (Key No. 10)**	**Diffuser (Key No. 11)**	**Motor Base**
P6EA6D36-204*	3/4	16502-0024	C105-238PX	C1-271P1	C104-79P
P6EA6E36-205*	1	16503-0024	C105-238P	C1-271P1	C104-79P
P6EA6F36-206	1.5	62001-1019	C105-238PBA	C1-271P1	C4-78P
P6EA6G36-207	2	62001-1020	C105-238PDBA	C1-271P	C104-79P
P6E6H36-209	3	62001-1021	C105-238PLA	C1-271PA	C104-79P

P6EA6D36-205, P6EA6E36-205
MAX-E-PRO™ POOL PUMP
3/4 & 1 HP Models

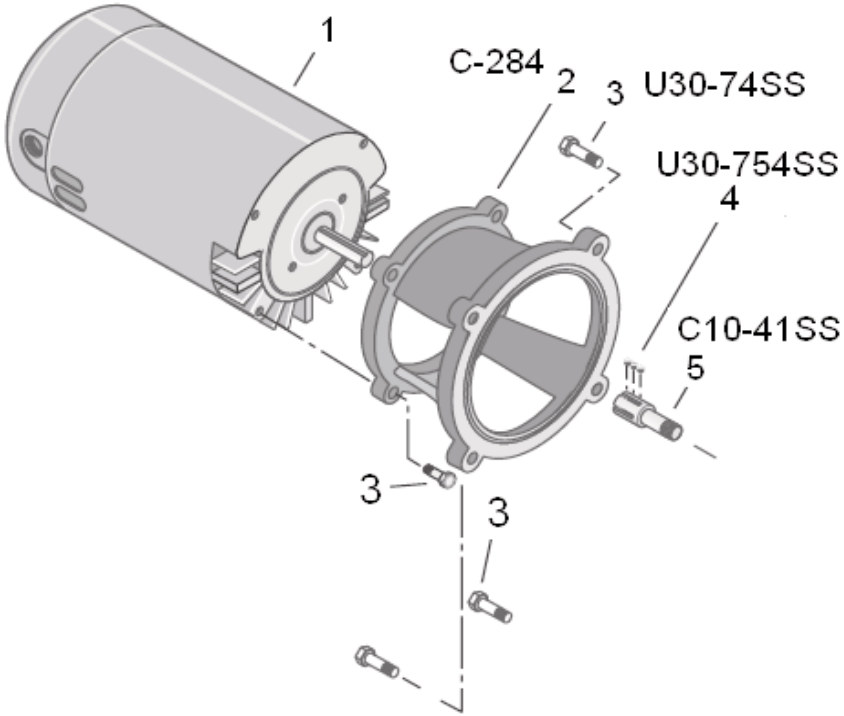

P6E, P6EA, P6RA
MAX-E-PRO™ POOL PUMP
1/2 through 3 HP Models

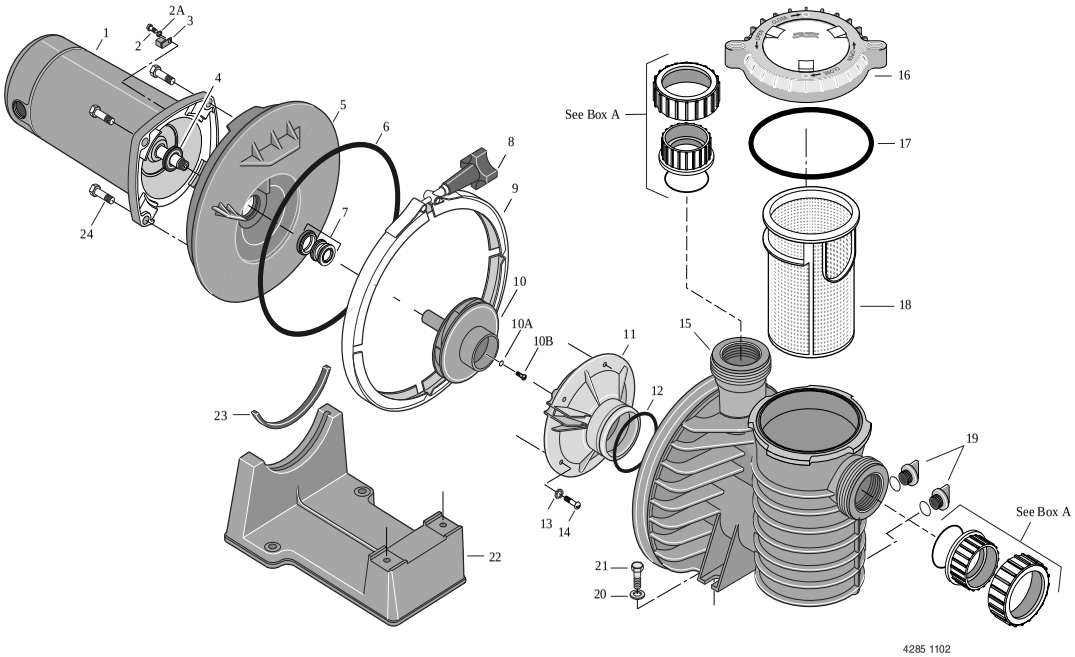

Notes

Notes

STA-RITE®

© 2014 Pentair Water Pool and Spa, Inc. All rights reserved.

1620 Hawkins Ave., Sanford, NC 27330 • (919) 566-8000
10951 West Los Angeles Ave., Moorpark, CA 93021 • (805) 553-5000

All Pentair trademarks and logos are owned by Pentair or one of its global affiliates. Pentair Aquatic Systems™, Max-E-Pro® and Sta-Rite® are trademarks and/or registered trademarks of Pentair Water Pool and Spa, Inc. and/or its affiliated companies in the United States and/ or other countries. Unless expressly noted, names and brands of third parties that may be used in this document are not used to indicate an affiliation or endorsement between the owners of these names and brands and Pentair Water Pool and Spa, Inc. Those names and brands may be the trademarks or registered trademarks of those third parties. Because we are continuously improving our products and services, Pentair reserves the right to change specifications without prior notice. Pentair is an equal opportunity employer.

S691 Rev C 5-16-14