MAX-E-PRO SERIES REPLACEMENT PARTS

REPLACEMENT PARTS

MAX-E-PRO SERIES REPLACEMENT PARTS		
Item No.	**Part No.**	**Description**
2	U30-692SS	Screw
2A	U43-22SS	Lockwasher
3	U17-568	Bonding Lug
4	17351-0009	Water Slinger
5	C203-194P	Seal Plate Kit (Includes Part Nos. 6, 7)
6	U9-228A	O-Ring
7	37400-0028S	Shaft Seal, Viton
8	WC36-22	Clamp Knob
9	C19-37A	V-Clamp
10A	35505-1426	Impeller O-Ring Screw
12	U9-374	Diffuser O-Ring
13	U43-21SS	Lockwasher, #8
14	U30-542SS	Capscrew, 8-32 x 7/8" (w/C1-271P1 Diffuser)

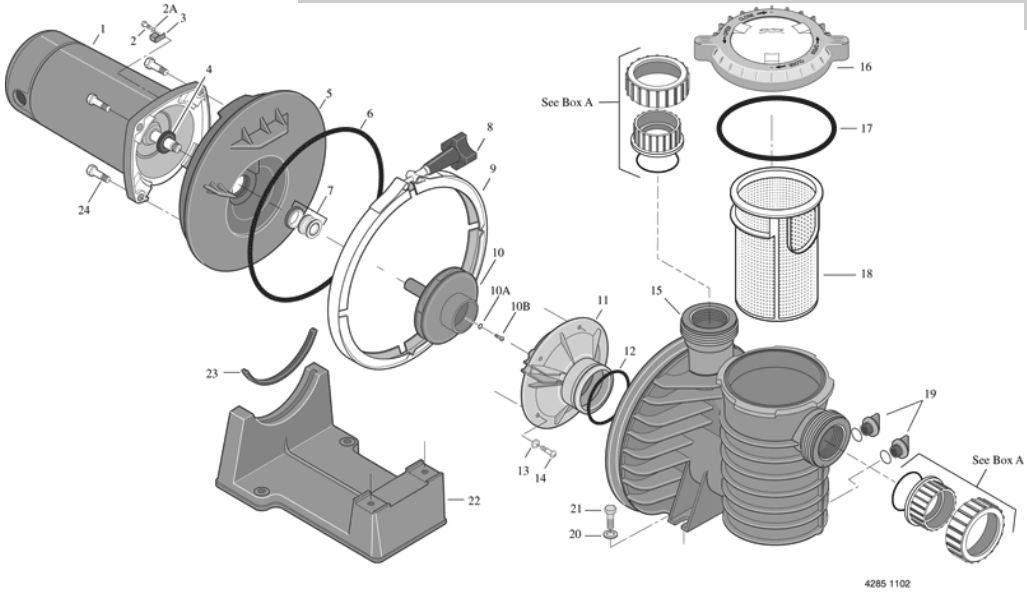

15	17307-0110S	Tank Body Assembly [2]
16	17307-0111S	Trap Cover Assembly [1]
17	35505-1440	Trap Cover, O-Ring
18	C8-58P	Trap Basket
19	U178-920P	1/4" NPT Plug with O-Ring
19	U9-359	O-Ring drain plug
20	U43-41SS	Base Washer
21	U30-918SS	Screw, Base
22	C4-78P	Base
22	C104-79P	Base with Motor Pad (3 HP only)
23	C35-43	Motor Pad
23	C35-44	Motor Pad (3 HP only)
24	U30-74SS	Bolt, 3/8 - 16 x 1 in. S.S. Hex Hd Screw
24	U30-99SS	Capscrew, Socket Head, 3/ 8-16 x 1" (3 HP only) Hex Hd Screw

NOT SHOWN

Item No.	Part No.	Description
	U27-68	Voltage Sticker - 230 Volts (Single voltage models only)
	U27-153	Voltage Sticker

1: Includes Trap Cover, Trap Ring and Trap Cover O-Ring.

2: Includes Trap Body, Basket, Drain Plugs, and Trap Cover Assembly.

3: Uses Key No. 10B Impeller Screw No. 37337-6080.

4: Uses Key No. 10B Impeller Screw No. 37337-6081.