XStream® Filtration Series

CARTRIDGE FILTER SERIES REPLACEMENT PARTS

Parts Diagram

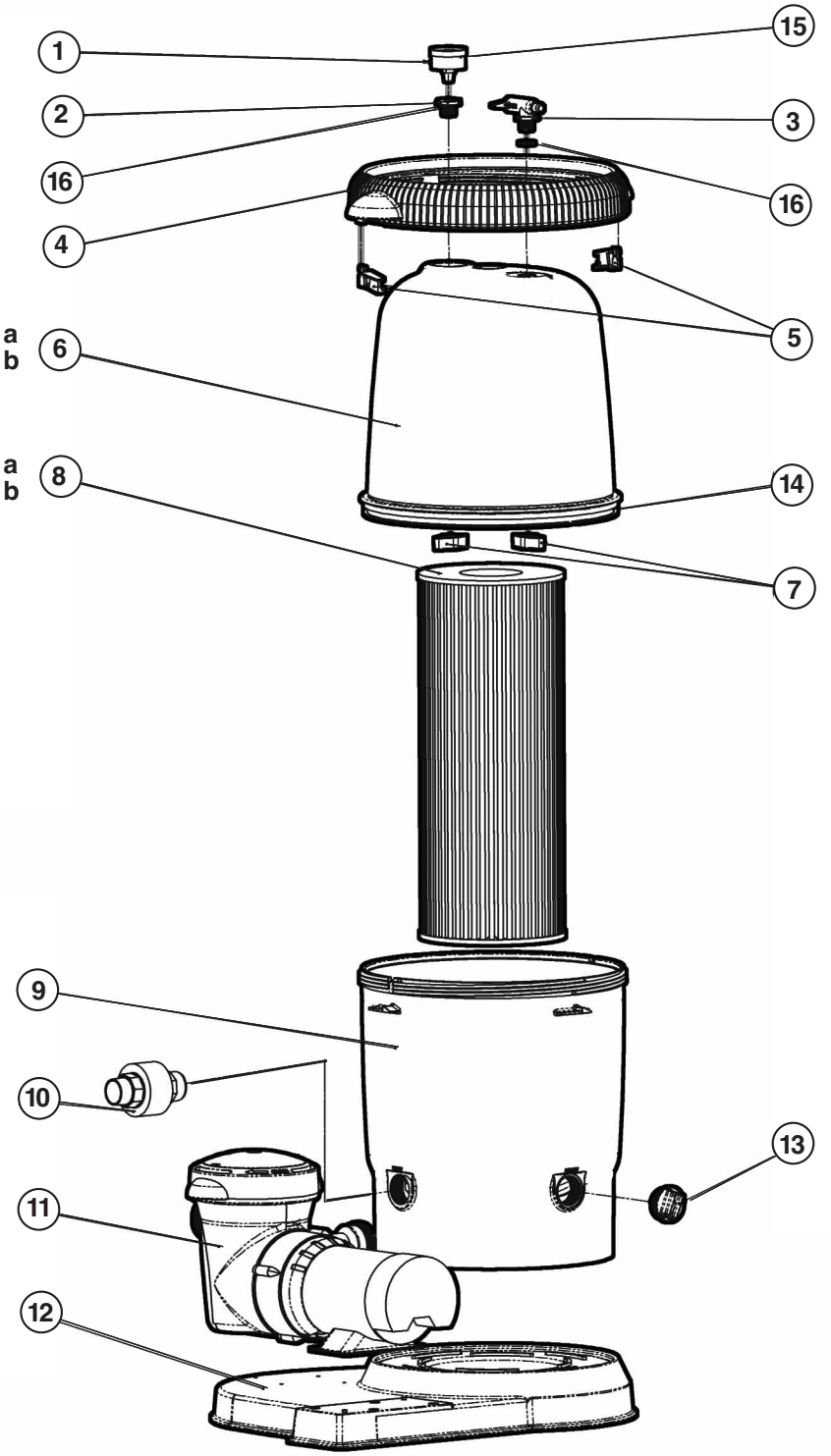

Parts Listing

Ref. No.	Part No.	Description	Ctn. Qty.	No. Req'd
1	ECX2709A1	Pressure Gauge	10	1
2	CCX1000L	Threaded Adapter for Pressure Gauge	10	1
3	CCX1000V	Air Relief Assembly with O-Ring	10	1
4	CCX1000D	Lock Ring Assembly with 2 Safety Clips	1	1
5	CCX1000H	Safety Clips for Lock Ring *(Set of 2)*	10	2
6a	CCX1000C	Filter Lid with Lock Ring, 100 sq. ft.	1	1
6b	CCX1500C	Filter Lid with Lock Ring, 150 sq. ft.	1	1
7	CCX1000N	Adapter Nut *(Set of 2)*	10	2
8a	CCX1000RE	Cartridge Element, 100 sq. ft.	1	1
8b	CCX1500RE	Cartridge Element, 150 sq. ft.	1	1
9	CCX1000B	Filter, Lower Body	1	1
10	SP1480BLK	Self Aligning Union, Black	50	1
11	Varies per model	Above-ground Pump	1	1
12	CCX1000A	Base, Standard	1	1
13	SP1022CBLK	Drain Plug with O-Ring, Threaded 1 ½" (Black)	100	1
14	CCX1000G	Body O-Ring	1	1
15	SPX1500W	Pressure Gauge O-Ring	10	1
16	CCX1000Z5	O-Ring for Gauge Adapter and Air Relief	10	2